# TDKRU - Time Delay Key Release Unit

Kirk Key Interlock Company
211Wetmore Ave. S.E., Massillon, OH 44646
Phone: 330.833.8223 • Fax: 330.833.1528
Toll Free: 1.800.438.2442

**www.kirkkey.com**

TDKRU - Housed

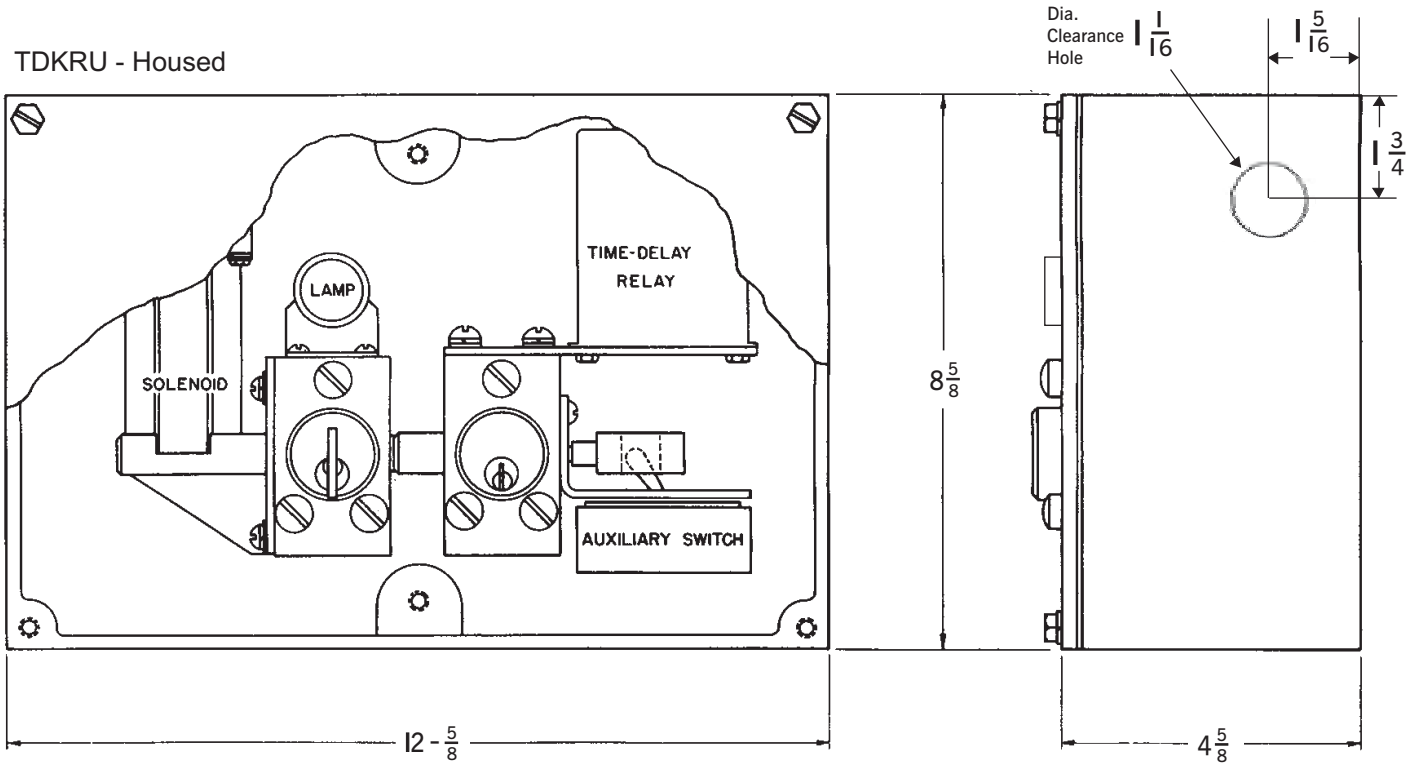


TDKRU - With
Cover Plate Only

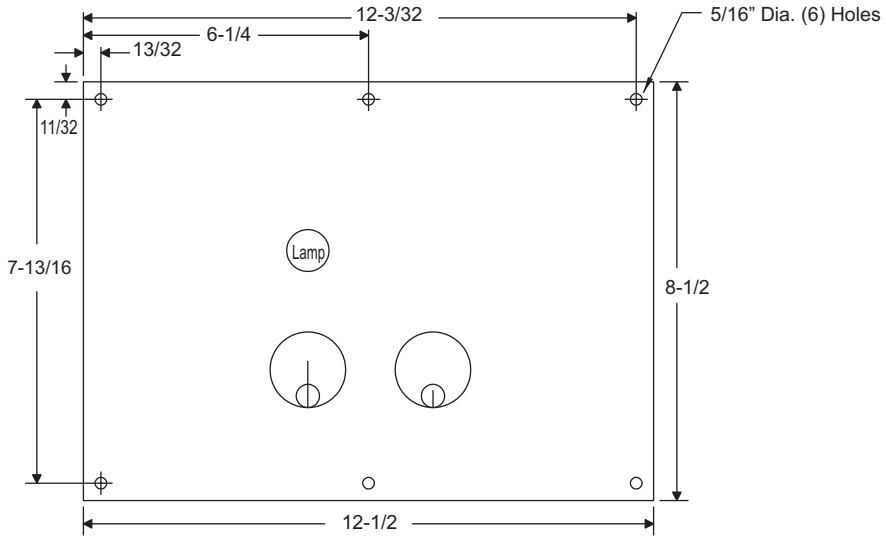


* All Dimensions shown in inches.